WHITE
OUTDOOR PRODUCTS

PARTS CATALOG
AND
INSTRUCTION MANUAL

ROTO BOSS 310
Chain Drive Tiller

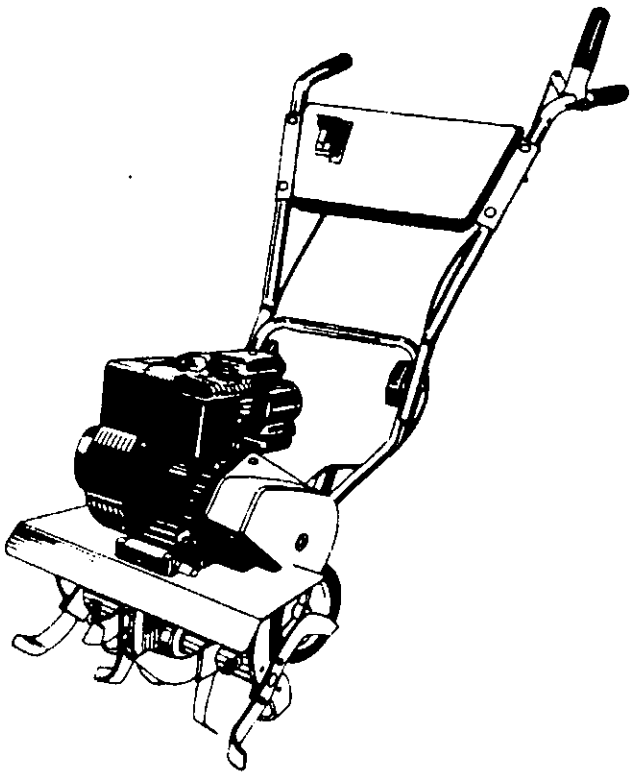

Model No.
216-031-190

Thank you for purchasing
an American-built product.

PRINTED IN U.S.A.

FORM NO. 770-5523A

INDEX

Instructions given with this symbol are for personal safety. Be sure to follow them.

LIMITED WARRANTY

For one year from the date of original retail purchase, WHITE OUTDOOR PRODUCTS will either repair or replace, at its option, free of charge, F.O.B. factory or authorized service firm, any part or parts found to be defective in material or workmanship. Transportation charges for the movement of any power equipment unit or attachment are the responsibility of the purchaser. Transportation charges for any parts submitted for replacement under this warranty must be paid by the purchaser unless such return is requested by WHITE OUTDOOR PRODUCTS.

This warranty will not apply to any part which has become inoperative due to misuse, excessive use, accident, neglect, improper maintenance, alterations, or unless the unit has been operated and maintained in accordance with the instructions furnished. This warranty does not apply to the engine, motor, battery, battery charger or component parts thereof. Please refer to the applicable manufacturer's warranty on these items.

This warranty will not apply where the unit has been used commercially.

Warranty service is available through your local authorized service dealer or distributor. If you do not know the dealer or distributor in your area, please write to the Customer Service Department of WHITE OUTDOOR PRODUCTS.

The return of a complete unit will not be accepted by the factory unless prior written permission has been extended by WHITE OUTDOOR PRODUCTS.

This warranty gives you specific legal rights. You may also have other rights which vary from state to state.

WARNING

This unit is equipped with an internal combustion engine and should not be used on or near any unimproved forest-covered, brush-covered or grass-covered land unless the engine's exhaust system is equipped with a spark arrester meeting applicable local or state laws (if any). If a spark arrester is used, it should be maintained in effective working order by the operator.

In the State of California the above is required by law (Section 4442 of the California Public Resources Code). Other states may have similar laws. Federal laws apply on federal lands. A spark arrester muffler is available at your nearest engine authorized service center.

WARNING

To reduce the potential for any injury, comply with the following safety instructions. Failure to comply with the instructions may result in personal injury.

SAFE OPERATION PRACTICES FOR TILLERS

1. It is suggested that this manual be read in its entirety before attempting to assemble or operate this unit. Keep this manual in a safe place for future and regular reference and for ordering replacement parts.

2. Your tiller is a precision piece of power equipment, not a plaything. Therefore, exercise extreme caution at all times.

3. Read this Owner's Manual carefully. Be thoroughly familiar with the controls and the proper use of the equipment.

4. Never allow children to operate a power tiller. Only persons well acquainted with these rules of safe operation should be allowed to use your tiller.

5. No one should operate this unit while intoxicated or while taking medication that impairs the senses or reactions.

6. Keep the area of operation clear of all persons, particularly small children and pets.

7. Do not operate equipment when barefoot or wearing open sandals. Always wear substantial footwear.

8. Do not wear loose fitting clothing that could get caught on the tiller.

9. Do not start the engine unless the shift lever is in the neutral (N) position.

10. Do not stand in front of the tiller while starting the engine.

11. Do not place feet and hands on or near the tines when starting the engine or while the engine is running.

12. Never attempt to make a wheel or depth bar adjustment while the engine is running.

13. Do not leave the tiller unattended with the engine running.

14. Do not walk in front of the tiller while the engine is running.

15. Check the fuel before starting the engine. Gasoline is an extremely flammable fuel. Do not fill gasoline tank indoors, while the engine is running, or while the engine is still hot. Replace gasoline cap securely, and wipe off any spilled gasoline before starting the engine as it may cause a fire or explosion.

16. Do not run the engine while indoors. Exhaust gases are deadly poisonous.

17. Be careful not to touch the muffler after the engine has been running. It is hot.

18. Do not change the engine governor settings or overspeed the engine. Excessive engine speeds are dangerous.

19. Before any maintenance work is performed or adjustments are made, remove the spark plug wire and ground it on the engine block for added safety.

20. Use caution when tilling near buildings and fences. Rotating tines can cause damage or injury.

21. Before attempting to remove rocks, bricks and other objects from tines, stop the engine and be sure the tines have stopped completely. Disconnect the spark plug wire and ground to prevent accidental starting.

22. Check the tine and engine mounting bolts at frequent intervals for proper tightness.

23. Keep all nuts, bolts and screws tight to be sure the equipment is in safe working condition.

24. Never store the equipment with gasoline in the tank inside of a building where fumes may reach an open flame or spark. Allow the engine to cool before storing in any enclosure.

ASSEMBLY

NOTE

Reference to left or right side of the tiller is determined from behind the unit in the operating position.

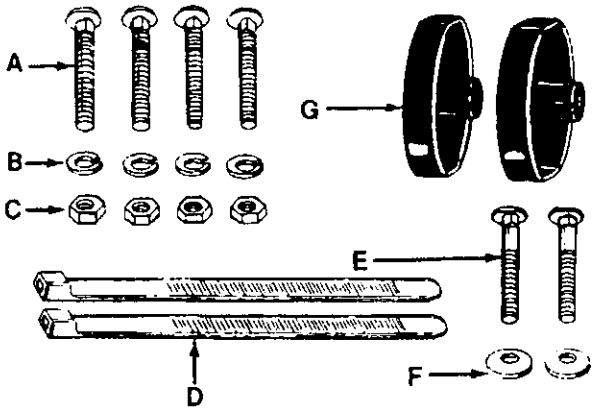

FIGURE 1.

NOTE

This unit is shipped WITHOUT GASOLINE or OIL. After assembly, see separate engine manual for proper fuel and engine oil recommendations.

Contents of Hardware Pack (See Figure 1):

A (4) Carriage Bolts 5/16-18 x 1½" Long
B (4) Lock Washers 5/16" I.D.
C (4) Hex Nuts 5/16-18 Thread
D (2) Cable Ties
E (2) Curved Head Bolts
F (2) Belleville Washers 5/16" I.D.
G (2) Hand Knobs

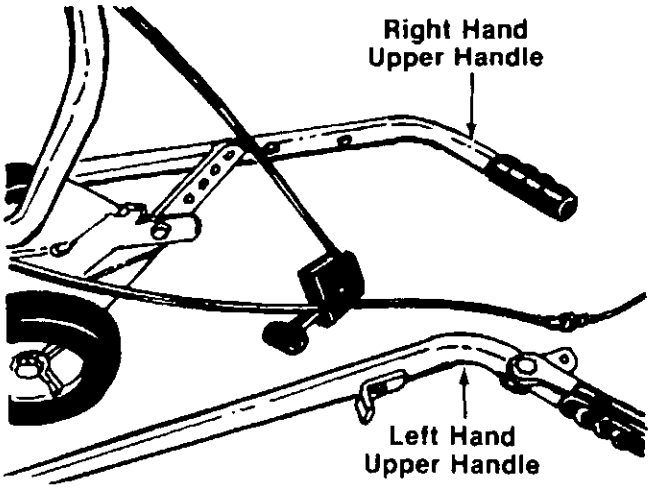

FIGURE 2.

Loose Parts in Carton:

(1) Upper Handle—R.H.
(1) Upper Handle—L.H.
(1) Handle Panel

Tools Required

(2) ½" open end or box wrenches

1. Remove the tiller from the carton. Make certain all parts and literature have been removed before the carton is discarded.
2. Extend the control cables and place on the floor. Be careful not to bend or kink the cables.

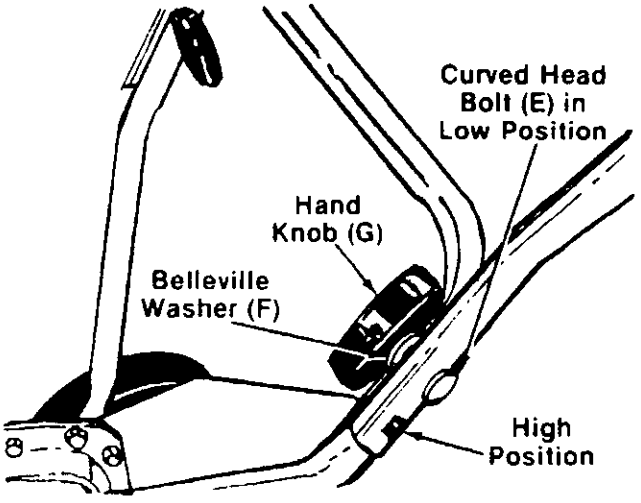

FIGURE 3.

3. There are two height positions for the upper handles. Place left hand upper handle (with clutch grip and cable support bracket already assembled) in position on lower handle, selecting hole for either high or low position. Secure with curved head bolt (E), belleville washer (F) (cupped side against the handle) and hand knob (G). See figure 3. Do not tighten at this time. Assemble right hand upper handle in the same manner.

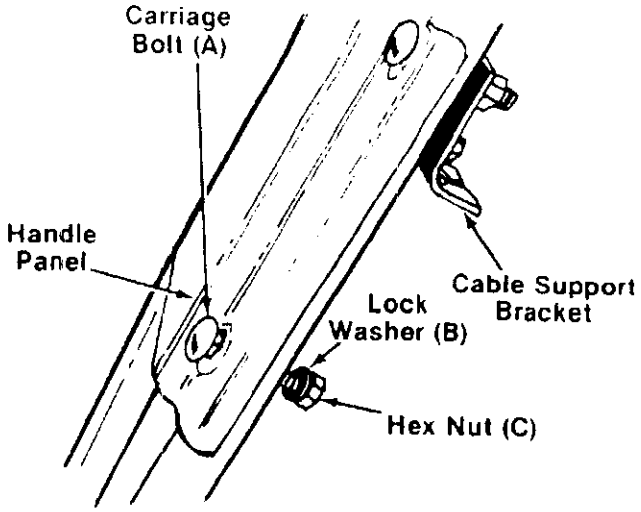

FIGURE 4.

4. Place the handle panel in position on the upper handles. Secure in position with four carriage bolts (A), lock washers (B) and hex nuts (C). See figure 4.

NOTE

Carriage bolt on the upper left hand side of handle panel also secures the cable support bracket.

5. Tighten securely all nuts and bolts used in handle assembly.

6. Assemble the throttle control to the handle panel as follows.

   A. Hold the throttle control assembly beneath the handle panel. Turn the control sideways and insert the lever up through the wide portion of the slot on the handle panel. See figure 5A.

   B. After the end of the lever is through the slot, turn and then tip the control forward as shown in figure 5B to slide it through the slot.

NOTE

The lever must be all the way to the back of the control housing as shown in figure 5B.

   C. Push the control back into the slot in the handle panel and press in place. Be certain the control is locked securely into the slot. See figure 5C.

   D. Secure the throttle control to the handle panel using self-tapping screw provided. See figure 5D.

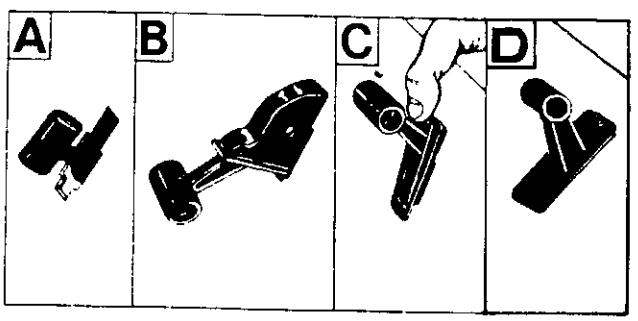

FIGURE 5.

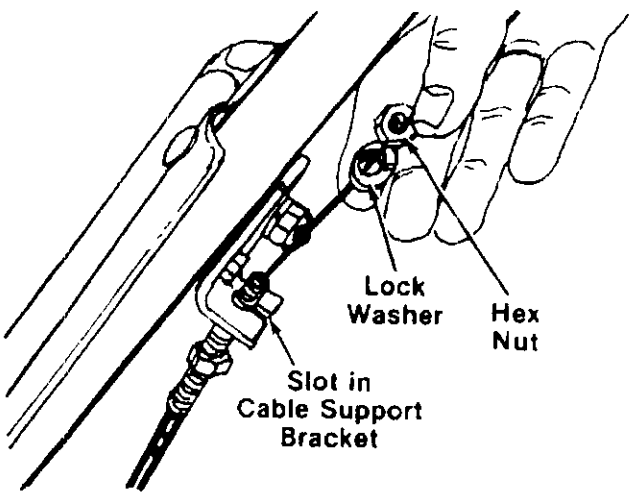

FIGURE 6.

7. Remove one hex nut and lock washer from end of clutch cable. Slip the wire up through slot on cable support bracket. Start hex nut and lock washer back on end of clutch cable. See figure 6.

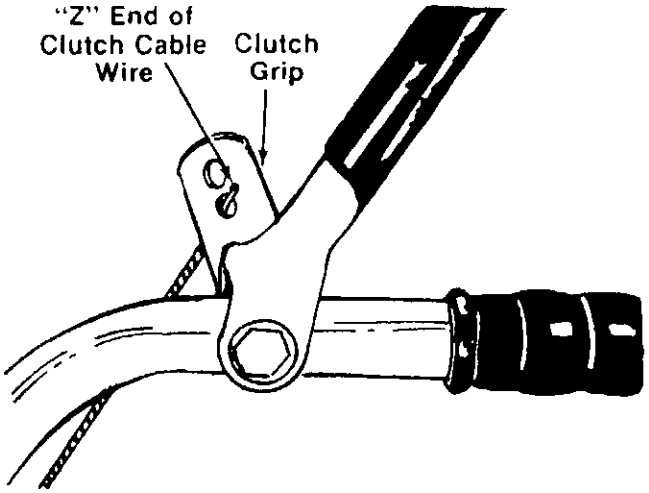

FIGURE 7.

8. Hook the "Z" end of clutch cable wire into bottom hole of clutch grip. See figure 7.
9. Hold the clutch grip so that the grip is down against the handle. Adjust the clutch control cable so that the slack is taken out of the control wire. Tighten the two hex nuts at the cable support bracket. Control wire should now be straight.

NOTE

Do not overtighten control wire. Too much tension may cause it to break.

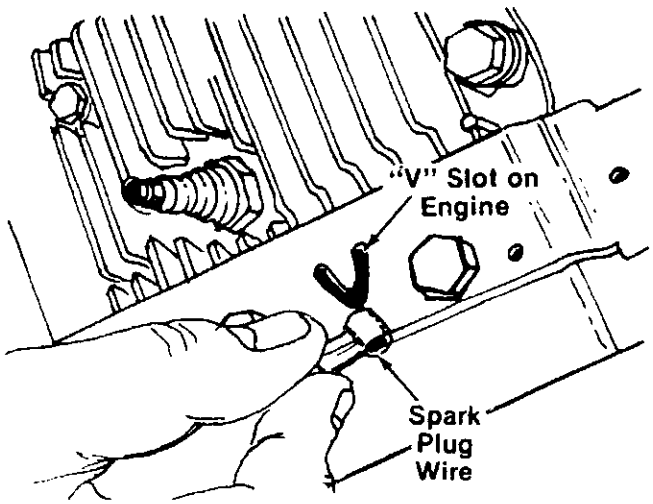

FIGURE 8.

10. To check the adjustment, disconnect the spark plug wire from spark plug to prevent accidental starting. Secure end of spark plug wire in the "V" slot on the engine. See figure 8. With the clutch grip released (neutral position), pull starter cord several times. **The tines should not turn.** If they do, adjust the hex nuts at the clutch cable bracket. Check again for correct adjustment.

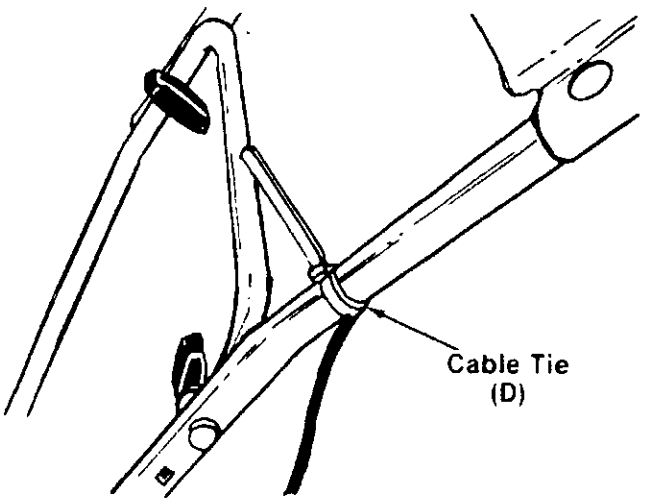

FIGURE 9.

11. Secure the clutch cable and throttle cable to the upper handles with cable ties (D) provided in hardware pack. See figure 9. Cut off excess end.

OPERATION

BEFORE STARTING ENGINE

1. **Check clutch adjustment before starting tiller.** Refer to step number 9 of Assembly Instructions.
2. Fill crankcase with 1¼ pints of oil or to top of filler neck. Be sure that the engine is level See figure 10.

   Use SAE No. 30 MS. SC, SD or SE oil. If not available, use SAE 10W-30.

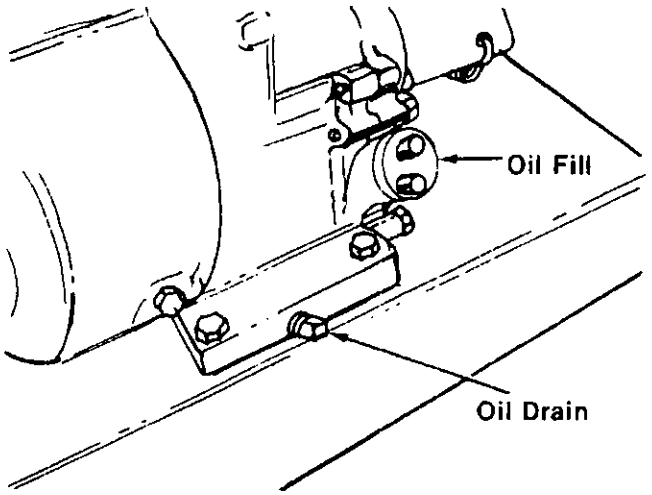

FIGURE 10.

3. Fill fuel tank using a good grade of fresh, clean, **regular** gasoline. Do not use gasoline that has been sitting for a long period of time

TO START ENGINE

WARNING

BE SURE NO ONE IS STANDING IN FRONT OF THE TILLER WHILE THE ENGINE IS RUNNING OR BEING STARTED

1. Attach spark plug wire to spark plug
2. Be certain the clutch grip is in the neutral (released) position. See figure 11

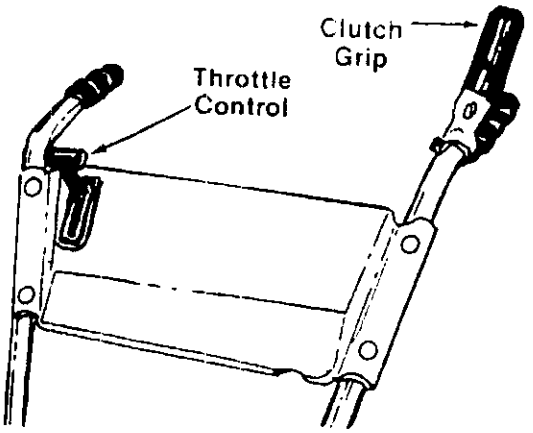

FIGURE 11.

3. Pull choke knob out to choke engine. See figure 12.
4. Move the throttle control lever forward to FAST POSITION. See figure 11.
5. Standing at side of the tiller, grasp the starter handle and pull out rapidly. Return it slowly to the engine. Repeat if necessary.
6. After engine starts, push choke knob gradually in to "OFF" position.

NOTE

Warm engine should not need choking.

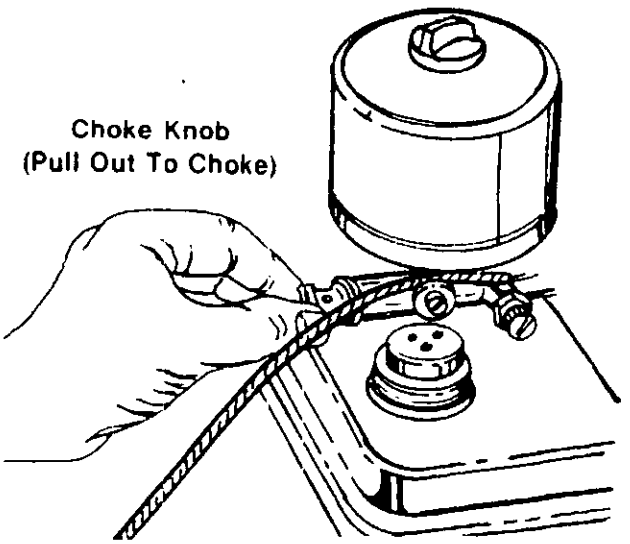

FIGURE 12.

TO STOP ENGINE

1. Move throttle control lever to "STOP" position.
2. Disconnect spark plug wire from spark plug to prevent accidental starting while equipment is unattended

CONTROLLING SPEED AND TILLING DEPTH

The tiller has eight 10-inch diameter, spring steel tines. Tine speed is 160 RPM The normal tilling depth is 4½ inches deep. It may be changed by adjusting the depth bar and pressure exerted on the handles. The tilling width may also be varied. See adjustment section.

Throttle Control

The throttle control lever is located on the right hand side of handle.

NOTE

Right hand side is determined from the operator's position standing behind the tiller.

The throttle control lever adjusts the engine speed. It also gives finger tip control of the carburetor and magneto stop switch. With the throttle control knob pushed completely forward, the carburetor is in FAST position. Pulling the throttle control back slightly adjusts the engine speed to START. Pulling the throttle back further reduces the engine speed to SLOW. When the throttle is pulled completely back, the magneto stop switch grounds out the spark and stops the engine. Move the throttle control to slow when transporting the tiller. When the tiller is being moved to or from the garden, the depth bar should be raised up until it clears the ground.

The machine may be moved under its own power, without damaging grass areas as long as it is allowed to move freely. If the operator holds back, it will start to dig.

Depth Bar

The depth bar acts as a brake for the tiller and controls the depth and speed at which the machine will operate. You may till deeper by moving the depth bar all the way down. See adjustment section.

Handle Pressure

Further control of tilling depth and travel speed can be obtained by variation of pressure on the handle. A downward pressure on the handle will reduce the working depth and increase the forward speed. An upward pressure on the handle will increase the working depth and reduce the forward speed. The type of soil and working conditions will determine the actual setting of the depth bar and the handle pressure required.

ADJUSTMENTS

WARNING

Disconnect the spark plug wire from spark plug and ground against the engine block (secure in "V" slot) before making any adjustments or performing maintenance. See figure 8.

HANDLE POSITION

The upper handle can be adjusted to two different heights. The operator of the tiller can easily adjust the handle position by unscrewing the two knobs, removing the two bolts and reassembling in another position. No tools are necessary to make this adjustment. See figure 13.

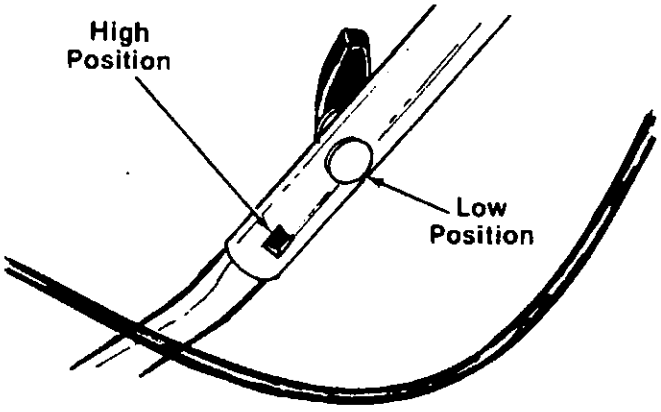

FIGURE 13.

DEPTH BAR ADJUSTMENT

The working depth of the tiller is determined by the position of the depth bar. Remove the clevis pin and internal cotter pin to raise or lower depth bar. See figure 14.

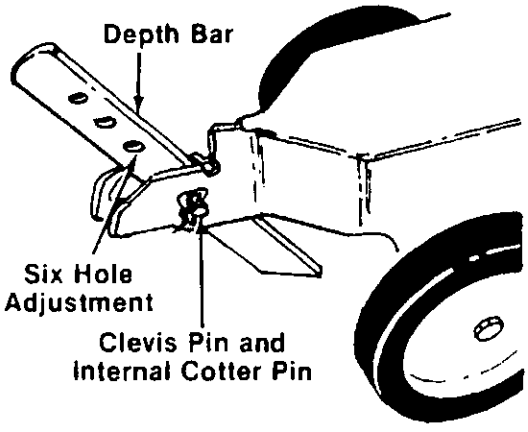

FIGURE 14.

TILLING WIDTH

There are three tilling widths available.

Remove the spark plug wire from spark plug and ground before making any adjustments to tine width

1. Standard tilling width is 18 inches See figure 15

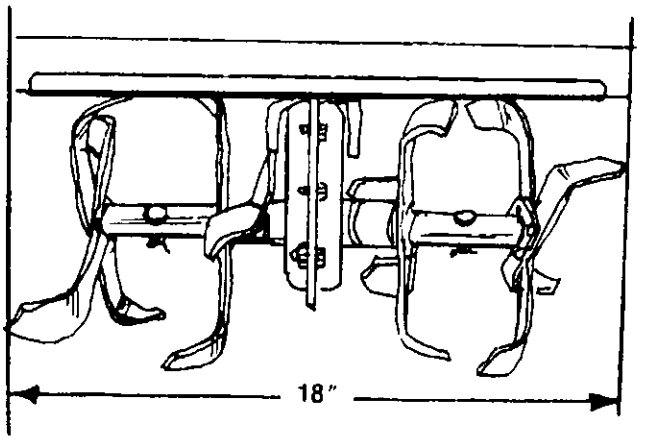

FIGURE 15.

2. A narrower width (14 inches) can be obtained by removing both outer tines. Use a 3/8" wrench to remove the two self-tapping screws on the outside of the tines. See figure 16. Replace the first tine removed as shown in figure 17.

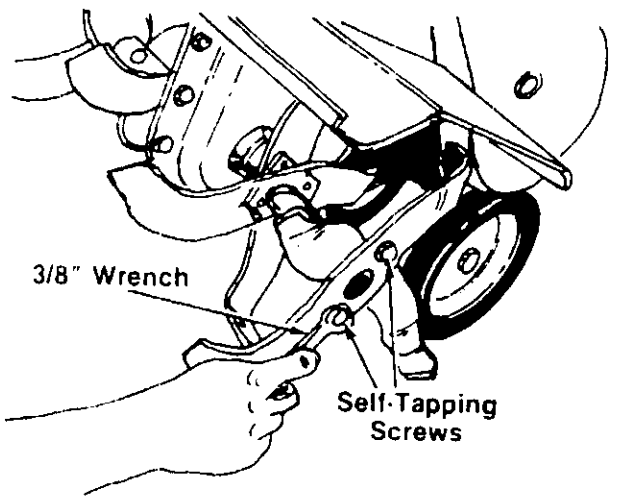

FIGURE 16.

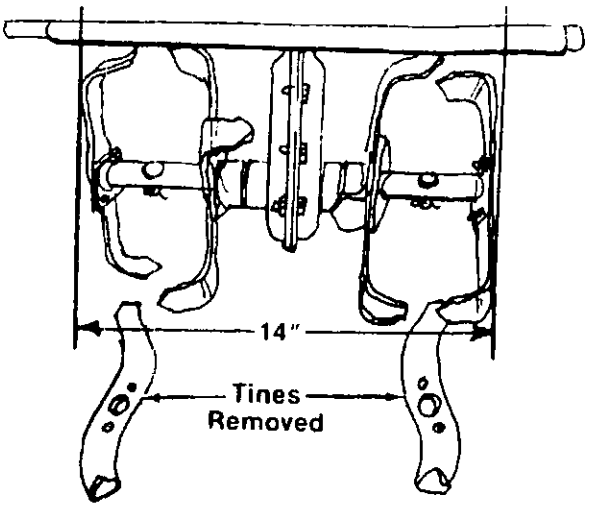

FIGURE 17.

3. The minimum tiller width that can be obtained is 10 inches. Remove the outer tines by removing the two self-tapping screws on the outside of the tines. See figure 18.

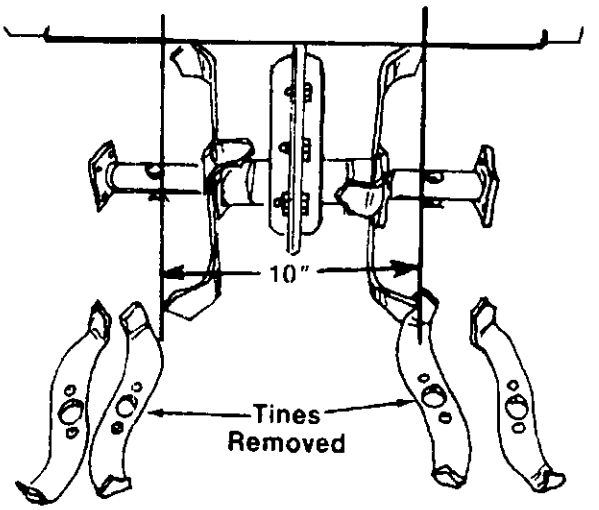

FIGURE 18.

CLUTCH ADJUSTMENT

Refer to step numbers 8 and 9 of Assembly Instructions for clutch adjustment information.

CARBURETOR ADJUSTMENT

If any adjustments are made to the engine while the engine is running (e.g. carburetor), disengage all clutches and tines. Keep clear of all moving parts. Be careful of heated surfaces and muffler.

Never make unnecessary adjustments. The factory recommended settings are correct for most applications.

If adjustments are needed, refer to the engine manual packed with the tiller.

LUBRICATION

Chain Case

The chain case is pre-lubricated and sealed at the factory. It requires no checking unless the chain case is disassembled. To fill with grease, lay the right half of the chain case on its side. Add 10 ounces of Plastilube #0 grease and assemble the left half to the right half. The grease can be obtained at your nearest authorized dealer listed on the back of this manual. Order part no. 737-0133.

MAINTENANCE

Disconnect the spark plug wire from spark plug and ground against the engine block (secure in "V" slot) before performing any maintenance. See figure 8.

CLEAN ENGINE

Wipe off all spilled fuel and oil. Keep the engine clean of foreign matter and be sure the cooling fins on the cylinder are kept clean to permit proper air circulation. This is an air cooled engine and free flow of air is essential to proper engine performance and life.

ENGINE OIL

Check oil level before each use. Be sure oil level is maintained full to point of overflowing. See figure 19.

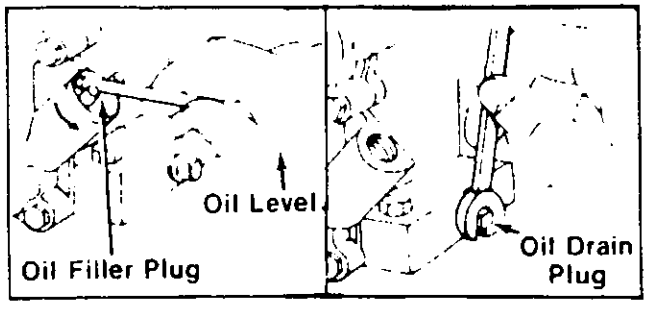

FIGURE 19.

Change the oil in the crankcase after the first two hours of operation of your new engine and after each 25 hours of use thereafter. This will ensure proper lubrication of internal parts to prevent excessive wear.

To change the oil, remove drain plug and tip the tiller forward while engine is warm. See figure 19. Replace drain plug. Remove oil filler cap, taking care to remove dirt around filler plug. Refill with new oil of proper grade. Replace filler cap.

AIR CLEANER

Service the air cleaner every 25 hours of operation. The air cleaner prevents damaging dirt, dust, etc. from entering the carburetor and being forced into the engine. It is important to engine life and performance.

To service air cleaner, refer to the engine manual packed with the tiller.

Never run your engine without air cleaner completely assembled.

SPARK PLUG

The spark plug should be cleaned and the gap reset at least once a season or when oil is changed. Spark plug replacement is recommended at the start of each season; check engine manual for correct plug type and gap specification.

BELT REPLACEMENT

1. Remove belt cover assembly by removing one hex nut and lock washer, one self-tapping screw, one hex bolt, flat washer and hex nut and one hex bolt and external lock washer. See figure 20.
2. Lift the belt cover assembly off the tiller. Be careful not to bend or kink the clutch cable. See figure 20.
3. Remove the belt and position the new belt on engine pulley and chain case pulley.

Upon reassembly of belt cover, place the belt over top of the idler pulley and between engine pulley and weld pin on belt cover assembly. See figure 20.

4. Fasten belt cover assembly in position. Secure with the hardware removed in step 1.

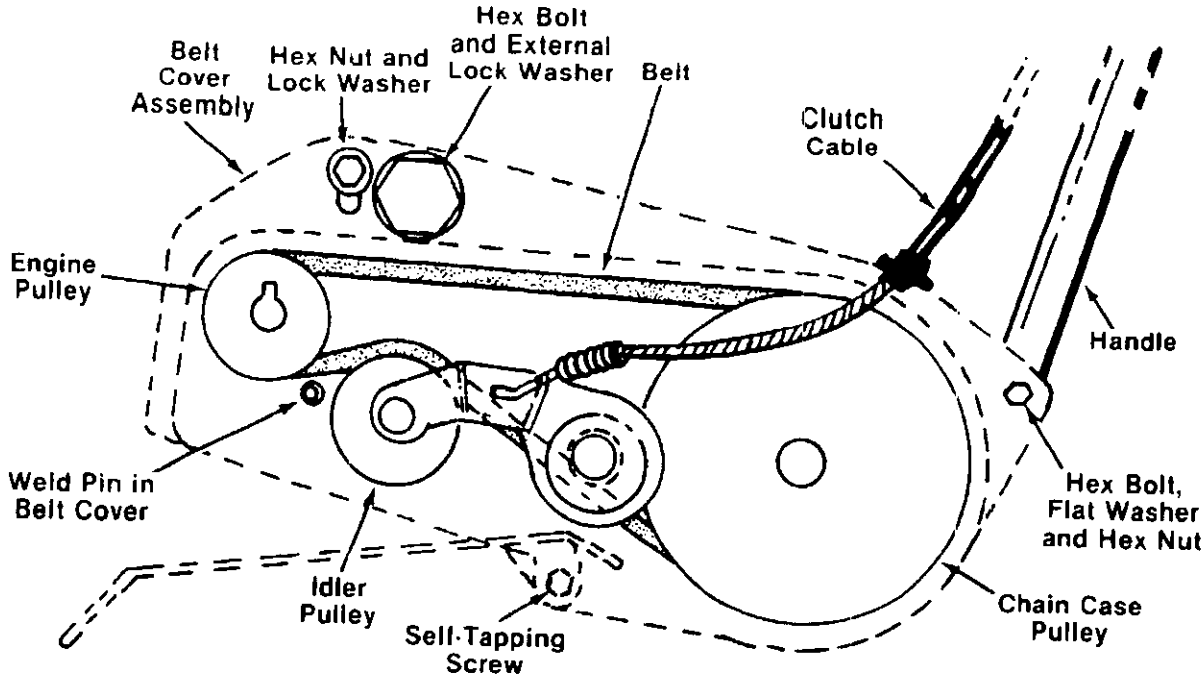

FIGURE 20.

OFF-SEASON STORAGE

If the tiller is not to be used for a while, the following procedure should be followed. The tines, depth bar, chain case and wheels should be cleaned of all dirt. It is very important that the unit be stored in a level position to prevent engine oil from draining into the cylinder head cavity.

Engines on tillers to be stored between seasons should be completely drained of fuel to prevent gum deposits forming on essential carburetor parts and fuel tank.

1. All fuel should be removed from fuel tank. Run the engine until it stops from lack of fuel. The small amount of fuel that remains in the sump of the tank should then be removed by absorbing it with a clean dry cloth.
2. Clean dirt and chaff from cylinder, cylinder head fins and blower housing.
3. Remove spark plug, pour 2 or 3 tablespoons of SAE-30 oil into cylinder and pull crank cord out slowly to distribute oil. Replace spark plug.

NOTE

When storing any type of power equipment in an unventilated or metal storage shed, care should be taken to rustproof the equipment. Using a light oil or silicone, coat the equipment, especially any chains, springs, bearings or cables.

TROUBLE SHOOTING CHART

SYMPTOM	POSSIBLE CAUSE(S)	SOLUTION
Engine fails to start	1. Check fuel tank for gas. 2. Spark plug lead wire disconnected. 3. Faulty spark plug.	1. Fill tank if empty. 2. Connect lead wire. 3. Spark should jump gap between control electrode and side electrode. If spark does not jump, replace the spark plug.
Hard starting or loss of power	1. Spark plug wire loose. 2. Dirty air cleaner.	1. Connect and tighten spark plug wire. 2. Clean air cleaner as described in engine manual.
Engine overheats	1. Carburetor not adjusted properly. 2. Air flow restricted. 3. Engine oil level low.	1. Adjust carburetor. See engine manual. 2. Remove blower housing and clean as described in the engine manual. 3. Fill crankcase with the proper oil.
Tine control does not engage	Belt worn and/or stretched.	Make control cable adjustment (see Assembly Instructions) or replace belt.

NOTE: For repairs beyond the minor adjustments listed above, please contact your local service dealer.

Chain Case Assembly 04924
Model 031

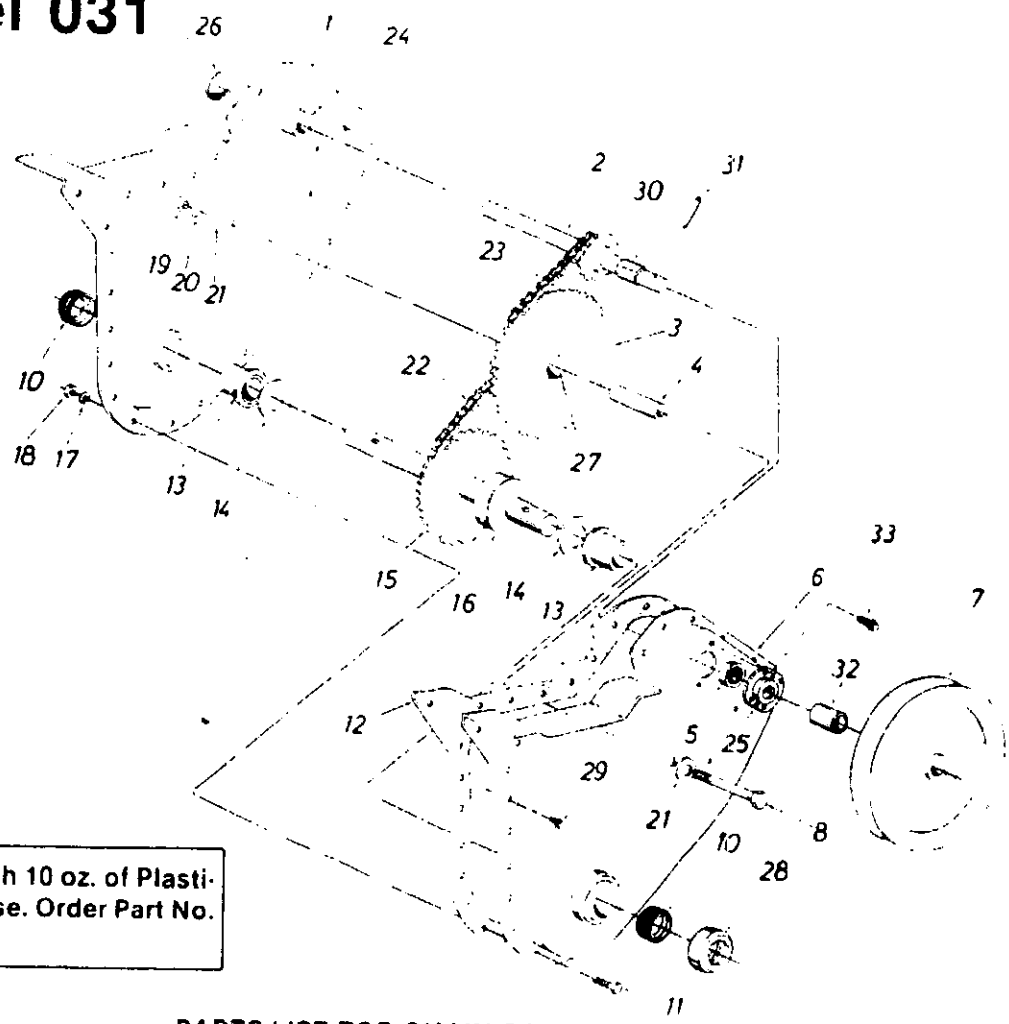

Lubricate with 10 oz. of Plasti-lube #0 Grease. Order Part No. 737-0133.

PARTS LIST FOR CHAIN CASE ASSEMBLY 04924

REF. NO.	PART NO.	COLOR CODE	DESCRIPTION	NEW PART	REF. NO.	PART NO.	COLOR CODE	DESCRIPTION	NEW PART
1	04926	—463	Chain Case Ass'y.—R.H.		21	736-0219		Bell-Wash. .406 I.D. x 1.130 O.D.	
2	04756		Input Shaft Ass'y.		22	713-0215		Chain #420—.50" Pitch x 38 Links	
3	04757		Hub and Sprocket Ass'y.		23	713-0216		Chain #35—.375" Pitch x 50 Links	
4	750-0351		Bearing Inner Race		24	748-0154		Bearing .62" I.D. x .813 O.D. x 1.31	
5	741-0155		Ball Bearing		25	05034		Bearing Housing	
6	15863	—463	Chain Case Ass'y.—L.H.		26	726-0164		Expansion Plug 13/16" Dia.	
7	756-0287		Pulley—Chain Case 5½ x ½††		27	741-0228		Bearing	
8	710-0369		Hex Bolt 3/8-24 x 2.50" Lg.*		28	731-0486		Dust Cap††	
10	721-0157		Seal††		29	710-0599		Hex Wash. Hd. Self-Tap Scr. ¼-20 x .50" Lg.	
11	710-0195		Hex Bolt ¼-28 x .625" Lg.*		30	750-0471		Spacer .630 I.D. x .77 O.D. x .38" Lg.	
12	721-0156		Gasket		31	715-0114		Spring Pin Spiral ¼" Dia. x 1½" Lg.††	
13	741-0227		Flange Brg. .879 I.D.		32	750-0550		Spacer .647 x 1.25"††	
14	736-0265		Fl-Wash. .88 I.D. x 1.50 O.D. x .030		33	710-0653		Hex Wash. Hd. Self-Tap Scr. ¼-20 x .38" Lg.	
15	04920		Tine Shaft Ass'y.						
16	750-0354		Spacer 7/8" I.D. x 2.0" O.D. x .68" Lg.						
17	736-0329		L-Wash. ¼" Scr.*						
18	712-0138		Hex Nut ¼-28 Thd.*						
19	712-0116		Hex Ins. L-Nut 3/8-24 Thd.						
20	736-0169		L-Wash. 3/8" I.D.*						

††Not part of chain case assembly.

Model 031

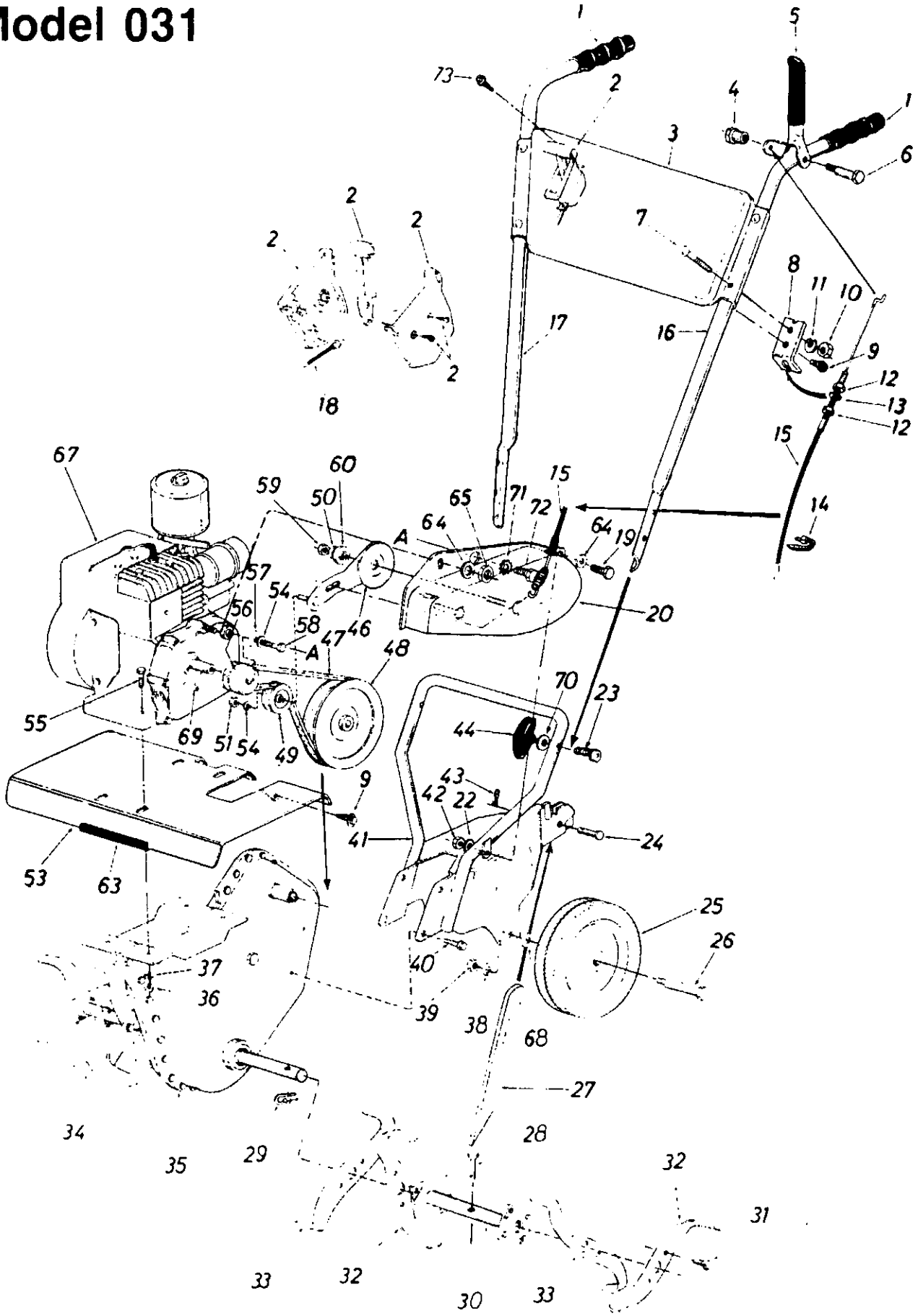
1
5
73
2
4
1
3
6
2
2
2
7
8
11
10
17
16
9
2
12
18
13
12
15
67
60
15
59
50
65
71
72
14
64
64
19
A
57
54
20
56
58
46
47
A
48
70
23
55
69
51
54
49
44
9
43
42
22
41
24
53
63
25
26
37
40
36
39
38
68
27
34
28
29
35
32
31
33
32
30
33

Model 031

PARTS LIST FOR MODEL 031 TILLER

REF. NO.	PART NO.	COLOR CODE	DESCRIPTION	NEW PART
1	720-0204		Grip	
2	831-0692		Throttle Control Box Ass'y.	
3	784-0036		Handle Panel	
4	738-0561		Shoulder Nut	
5	784-0007		Clutch Grip Ass'y.	
6	738-0572		Shoulder Bolt 3/8 x 1.160" Lg.	
7	710-0262		Carriage Bolt 5/16-18 x 1.5" Lg.*	
8	15093		Cable Support Bracket	
9	710-0599		Hex Wash. Hd. Self-Tap Scr. ¼-20 x .50" Lg	
10	712-0267		Hex Nut 5/16-18 Thd.*	
11	736-0119		L-Wash. 5/16" I.D *	
12	712-0256		Hex Jam Nut 5/16-24 Thd.	
13	736-0119		L-Wash. 5/16" I.D *	
14	725-0157		Cable Tie	
15	746-0509		Clutch Control Cable	
16	749-0631		Upper Handle—L.H.	
17	749-0630		Upper Handle—R.H.	
18	746-0419		Throttle Control Wire 26" Lg.	
19	710-0252		Hex Bolt ¼-20 x .75" Lg.*	
20	784-0018		Belt Cover Ass'y.	
22	736-0329		L-Wash ¼" I.D.*	
23	710-0405		Curved Hd. Bolt 5/16-18 x 1.75" Lg.	
24	711-0653		Clevis Pin	
25	734-0840		Wheel Ass'y. Comp. 7.0" x 1.5	
26	738-0126		Shoulder Bolt	
27	04764		Depth Bar	
28	711-0702		Clevis Pin .31" Dia. x 1.50" Lg.	
29	714-0145		Hairpin Cotter	
30	04918		Tine Adapter Ass'y.	
31	710-0599		Hex Wash. Hd. Self-Tap Scr ¼-20 x .50" Lg.	
32	04923		Tine Blade—L.H.	
33	04922		Tine Blade—R.H.	
34	04921		Tine Ass'y. Comp.	
35	04924		Chain Case Ass'y. Comp.	
36	712-0267		Hex Nut 5/16-18 Thd.*	
37	736-0119		L-Wash. 5/16" I.D.*	
38	736-0217		L-Wash. 3/8" I.D. (Heavy Duty)	
39	712-0375		Hex Cent. L-Nut 3/8-16 Thd.	
40	710-0600		Hex Wash. Hd Self-Tap Scr. 5/16-18 x .50" Lg.	
41	04762		Support Brkt. Ass'y.	
42	712-0287		Hex Nut ¼-20 Thd.*	
43	714-0104		Internal Cotter Pin	
44	09966		Hand Knob	
46	784-0016		Idler Arm Ass'y.	
47	754-0216		Belt 3/8" x 29" Lg.	
48	756-0287		Chain Case Pulley 5½ x ½"	
49	756-0199		Fl-Idler 2"	
50	736-0119		L-Wash. 5/16" I.D.*	
51	712-0116		Hex Nut 3/8-24 Thd.*	
53	04765	483	Tine Shield	
54	736-0169		L-Wash. 3/8" I.D.*	
55	710-0442		Hex Bolt 5/16-18 x 1.50" Lg.	
56	756-0286		Engine Pulley 3/8 V x .75 I.D. x 2" O.D.	
57	736-0258		Fl-Wash. .385" I.D. x 1.00" O.D.	
58	710-0152		Hex Bolt 3/8-24 x 1.00" Lg.*	
59	712-0267		Hex Nut 5/16-18 Thd.*	
60	736-0289		Shld. Spacer .50" Dia. x .133	
63	731-0511		Trim Strip—4"	
64	736-0142		Fl-Wash. .281" I.D. x .500" O.D.	
65	712-0107		Hex Cent. L-Nut ¼-20 Thd.	
67	—		Engine	
68	736-0219		Bell-Wash.	
69	714-0122		Square Key 3/16 x ¾" Lg.	
70	736-0242		Bell-Wash.	
71	736-0190		Ext. L-Wash. ½" I.D.	
72	710-0121		Hex Bolt ½-20 x .75" Lg.	
73	710-0779		Self-Tap Scr. #10 x .5" Lg.	

(483—Charcoal Grey)

*For faster service obtain standard nuts, bolts and washers locally. If these items cannot be obtained locally order by part number and size as shown on parts list.

If color or finish is important when ordering parts, use the appropriate color code shown above [i.e. (part no.)-483 for Charcoal Grey Finish].

NOTE

Specifications subject to change without notice or obligation.

Part No.	Description
777-4553	"WHITE" Plastic Logo
777-4541	"ROTO BOSS 310" Label
777-3774	Throttle Label

NOTE: The engine is not under warranty by the tiller manufacturer. If repairs or service is needed on the engine please contact your nearest authorized engine service outlet. Check the "Yellow Pages" of your telephone book under "Engines—Gasoline".

Find It Fast In The Yellow Pages

WHITE
OUTDOOR PRODUCTS

P.O. Box 8875 • Cleveland, Ohio • 44136
97 Kent Avenue • Kitchener, Ontario • N2G 4J1